29234E

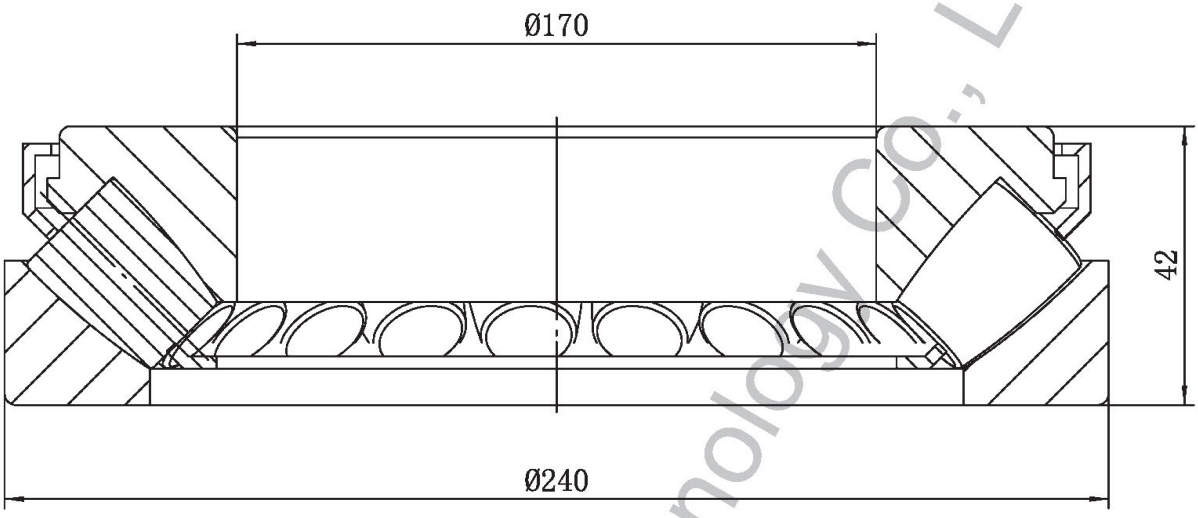

1 rated load: Cr= 390 KN ; Cor= 1700 KN ;

2 Heat treatment according to the current standards

Remark:

1. Luoyang JCB Bearing Technology Co., Ltd is a technical Inc, specialize in designing and manufacturing thrust bearing, we can design and manufactur all kinds of thrust bearing according to client's requirement.
2. This drawing is reference for user, if you need formal drawing, please contact wth us sales@jcb-bearing.com, the official drawing will be submitted after order confirmation.

serial	Name	Qty	Material			
07	cage		STEEL			
04	roller		steel GCr15-GB/T18254			
02	shaft washer		steel GCr15SiMn-GB/T18254			
01	house washer		steel GCr15SiMn-GB/T18254			Weight (kg)
						6.00

Thrust spherical roller bearing

29234E

Add: No.3 Lianmeng road, Luoyang, Henan, China.
Postal: 471003
Phone: +86-379-68611678
Fax: +86-379-68611679
E-mail: sales@jcb-bearing.com
Website: www.jcb-bearing.com
www.sphericalrollerthrustbearing.com

Luoyang JCB Bearing Technology Co., Ltd

Luoyang JCB Bearing Technology Co., Ltd